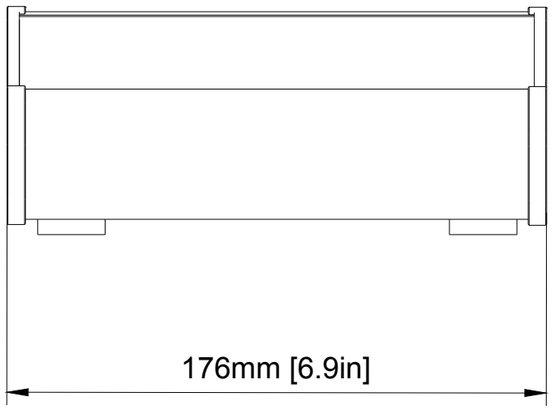
176mm [6.9in]

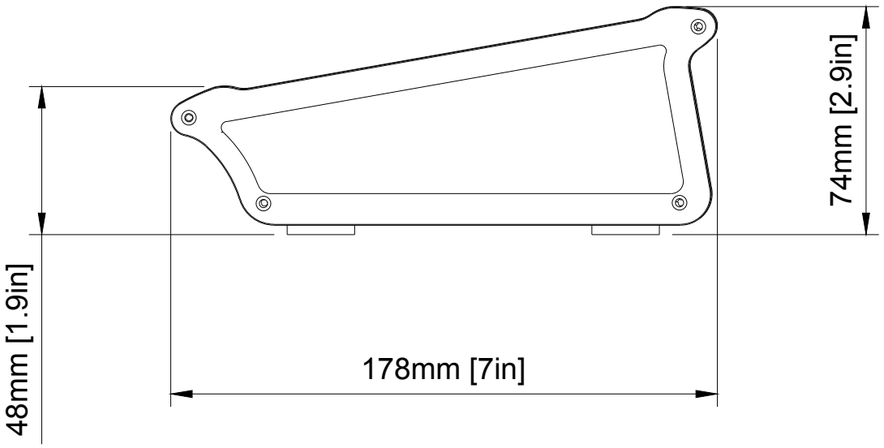
74mm [2.9in]
48mm [1.9in]
178mm [7in]